US007533846B2

(12) **United States Patent**
Sellars et al.

(10) **Patent No.: US 7,533,846 B2**
(45) **Date of Patent: May 19, 2009**

(54) **TOWEL ROLL PRODUCT WITH SUPPORTIVE, PROTECTIVE WRAPPER**

(75) Inventors: **John C. Sellars**, Wauwatosa, WI (US); **Jerry Ballas**, Media, PA (US); **Neal D. Watson**, Fox Point, WI (US)

(73) Assignee: **Sellars Absorbent Materials, Inc.**, Milwaukee, WI (US)

(*) Notice: Subject to any disclaimer, the term of this patent is extended or adjusted under 35 U.S.C. 154(b) by 18 days.

(21) Appl. No.: **11/738,880**

(22) Filed: **Apr. 23, 2007**

(65) **Prior Publication Data**

US 2008/0017750 A1 Jan. 24, 2008

Related U.S. Application Data

(60) Provisional application No. 60/793,751, filed on Apr. 21, 2006.

(51) **Int. Cl.**
B65H 75/18 (2006.01)

(52) **U.S. Cl.** **242/593**; 242/588; 206/389; 206/409

(58) **Field of Classification Search** 242/593, 242/588, 588.2, 588.3, 405, 405.3, 160.1, 242/160.3, 160.4; 206/389, 397, 398, 400, 206/402, 409, 410; D6/521–523
See application file for complete search history.

(56) **References Cited**

U.S. PATENT DOCUMENTS

4,002,264	A *	1/1977	Marchesani	.....	206/409
4,535,912	A *	8/1985	Bonk	.....	206/409
5,595,786	A *	1/1997	McBride et al.	.....	206/494
5,803,249	A *	9/1998	Harsanyi et al.	.....	206/233
6,220,435	B1 *	4/2001	Nobile et al.	.....	206/409
6,607,514	B2 *	8/2003	Reese	.....	206/210
6,779,662	B2 *	8/2004	Dorsey	.....	206/410
6,840,401	B2 *	1/2005	Amundson	.....	206/494
D504,794	S *	5/2005	Sellars	.....	D6/522
2002/0148748	A1 *	10/2002	Pikul	.....	206/409
2004/0251292	A1 *	12/2004	Grebonval et al.	.....	206/409
2007/0163909	A1 *	7/2007	Ice	.....	206/410

* cited by examiner

Primary Examiner—William A Rivera
(74) *Attorney, Agent, or Firm*—Fredrickson & Byron, PA

(57) **ABSTRACT**

A generally cylindrical towel roll product comprises an absorbent towel roll having an upright axis, and a flexible, water resistant, protective wrapper engaging the circumferential surface of the towel roll and of sufficient strength to restrain significant diametric expansion of the towel roll when the roll is subjected to an axial load and to increase axial stiffness of the product. The wrapper includes top and bottom portions that encase the top and bottom surfaces of the roll, respectively, the top wrapper portion having an opening providing axial access to the towel roll and through which individual towels can be drawn axially from the interior of the towel roll. A removable and replaceable soil and water-resistant cover protectively covers the wrapper opening, and a rigid disc may be provided between the top surface of the towel roll and the top portion of the wrapper, the disc extending radially to the periphery of the upper surface of the roll.
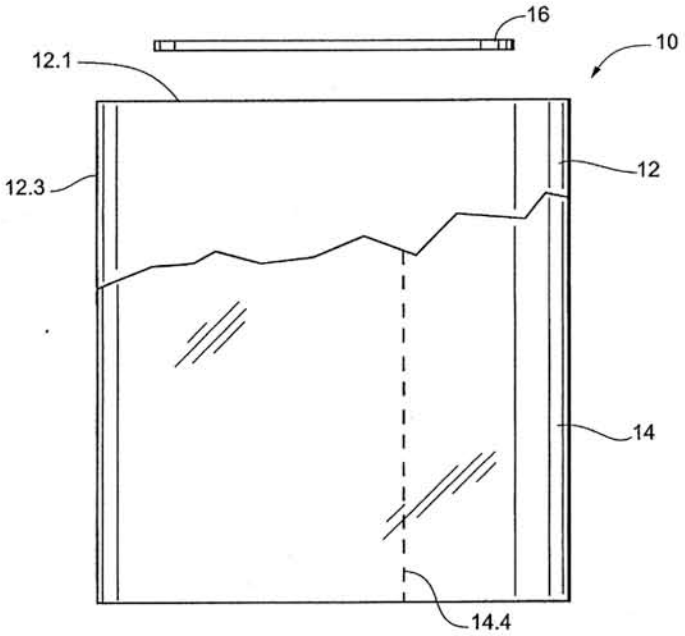
15 Claims, 6 Drawing Sheets